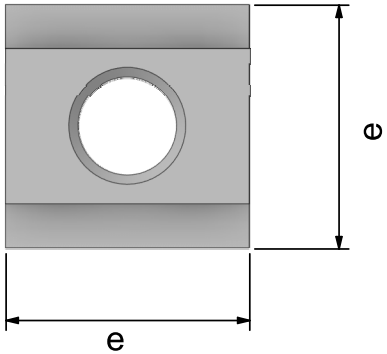

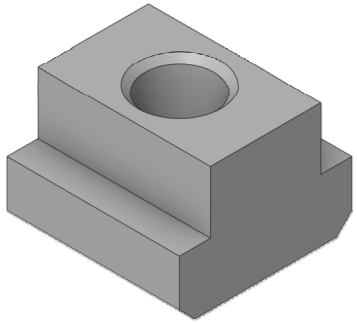

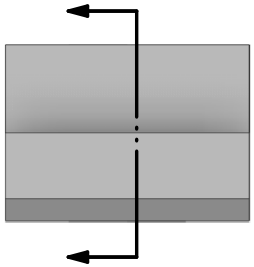

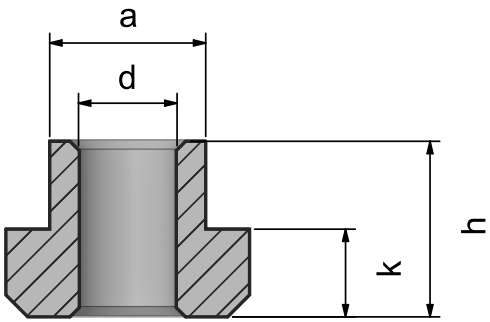

T-Slot Size [mm] (b1)	Thread Size (d)	Top Width [mm] (a)	Nut Width [mm] (e)	Nut Height [mm] (h)	Step Height [mm] (k)
5	M4	9	9	6.5	3
6	M5	10	10	8	4
8	M6	13	13	10	6
10	M8	16	15	12	6
12	M10	18	18	14	7
14	M12	22	22	16	8
16	M14	25	25	18	9
18	M16	28	28	20	10
20	M18	32	32	24	12
22	M20	35	35	28	14
24	M22	40	40	32	16
28	M24	44	44	36	18
36	M30	54	54	44	22
42	M36	65	65	52	26
48	M42	75	75	60	30
54	M48	85	85	70	34

MATERIAL

FINISH

TREATMENT

SIMILAR TO

Workshoppress.co.uk
Unit B2B Holly Farm
Honiley, Kenilworth
CV8 1QJ

info@workshoppress.co.uk
Phone: 0800 999 1090

INIT	APPROVALS	DATE	INIT	APPROVALS	DATE

Part / ID Number:

TITLE

DIN-508 T-Nut Reference

Notes

Corresponding: DIN-650 T-Slots

SIZE B | DWG NO. | REV

SCALE